# 155Mbps ATM-Single Mode Transceiver

## 2x5 SFF, Duplex LC Connector, 1550nm DFB LD for Single Mode Fiber, RoHS Compliant

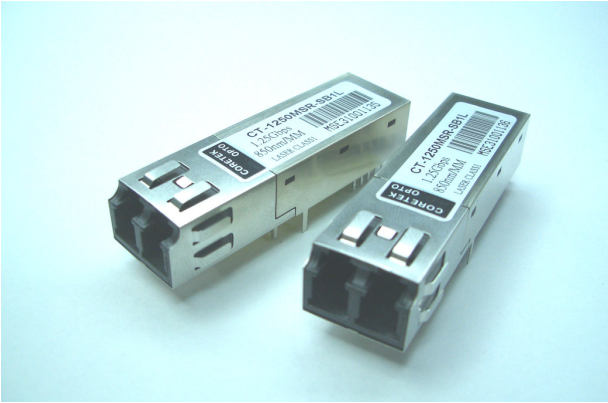

### Features

- 1550nm DFB LD
- Data Rate: 155Mbps, NRZ
- Single +3.3V Power Supply
- RoHS Compliant and Lead-free
- PECL Differential Electrical Interface
- Compliant with Multi-Source Agreement (MSA) Small Form Factor (SFF) 2x5 Footprint
- Duplex LC Connector
- Compliance with
  100Base-FX of IEEE802.3u Standard
  FDDI PMD Standard
  ATM Standard
- Eye Safety
  Designed to meet Laser Class 1 comply with EN60825-1

### Applications

- Fast Ethernet
- FDDI
- ATM/SONET OC-3/SDH STM-1
- Single mode fiber links
- Optical-Electrical Interface Conversion

### Description

The CT-0155TSR-Kx8L series from Coretek Opto Corp. are the high performance and cost-effective modules for serial optical data communication applications specified for single mode of 155 Mb/s. It operates with +3.3V power supply. The module is intended for single mode fiber, operates at a nominal wavelength of 1550nm and complies with Multi-Source Agreement (MSA) Small Form Factor (SFF) 2x5 footprint. Each module consists of a transmitter optical subassembly, a receiver optical subassembly and an electrical subassembly. All of them are housed in a plastic package and the combination produces a reliable component.

The module is a duplex LC transceiver designed for use in fast Ethernet applications and to provide an ATM/SONET OC-3/SDH STM-1 compliant link for 155 Mb/s long reach applications. The characteristics are performed in accordance with Telcordia Specification GR-468-CORE.

### EMC

Most equipment utilizing high-speed transceivers will be required to meet the following requirements:

1) FCC in the United States
2) CENELEC EN55022 (CISPR 22) in Europe

To assist the customer in managing the overall equipment EMC performance, the transceivers have been designed to satisfy FCC class B limits and provide good immunity to radio-frequency electromagnetic fields.

### Eye Safety

The transceivers have been designed to meet Class 1 eye safety and comply with EN 60825-1.



Coretek Opto Corp. 1F,10 Industry E. Rd. IV., Science-Based Industrial Park, Hsinchu, Taiwan, R.O.C.
http://www.coretek.com.tw Tel:886-3-5787871 Fax:886-3-5645105

05/08/2006
Version：B

## Product Information

| Model Number | Operating Voltage & SD Output | Distance | LD Type & Wavelength | Output Power | Sensitivity |
|---|---|---|---|---|---|
| *CT-0155TSR-K28L* | *3.3V PECL DC/DC* | *80 km* | *1550 nm DFB* | *-5 ~ 0 dBm* | *≦-34 dBm* |
| *CT-0155TSR-KE8L* | *3.3V TTL DC/DC* | | | | |

## ABSOLUTE MAX RATINGS

| PARAMETER | SYMBOL | MIN | MAX | UNIT | NOTE |
|---|---|---|---|---|---|
| Storage Temperature | $T_S$ | -40 | 85 | ℃ | |
| Supply Voltage | $V_{CC}$ | 0 | 6 | V | |
| Lead Soldering Temperature/Time | $T_{SOLD}$ | | 260 | ℃ | 10 sec on lead |
| Data Input Voltage | --- | 0 | Vcc | V | |

## OPERATING CONDITIONS

| PARAMETER | SYMBOL | MIN. | TYP. | MAX. | UNIT | NOTE |
|---|---|---|---|---|---|---|
| Ambient Operating Temperature | $T_A$ | 0 | | 70 | ℃ | |
| Supply Voltage | $V_{CC}$ | 3.1 | | 3.5 | V | |

## ELECTRICAL CHARACTERISTICS

| PARAMETER | SYMBOL | MIN | MAX | UNIT | NOTE |
|---|---|---|---|---|---|
| **Transmitter** | | | | | |
| Transmitter Supply Current | $I_{CCT}$ | | 200 | mA | |
| TTL Transmit Disable Input Voltage - Low | $V_{IL}$ | | 0.8 | V | |
| TTL Transmit Disable Input Voltage - High | $V_{IH}$ | Vcc-1.3 | Vcc | V | |
| **Receiver** | | | | | |
| Receiver Supply Current | $I_{CCR}$ | | 100 | mA | |
| Receiver Data Output Voltage – Low | $V_{OL}$-$V_{CC}$ | -1.810 | -1.620 | V | 1 |
| Receiver Data Output Voltage – High | $V_{OH}$-$V_{CC}$ | -1.025 | -0.880 | V | 1 |
| Signal Detect Output Voltage – Low (for PECL) | $V_{OL}$-$V_{CC}$ | -1.810 | -1.620 | V | 1 |
| Signal Detect Output Voltage – High (for PECL) | $V_{OH}$-$V_{CC}$ | -1.025 | -0.880 | V | 1 |
| Signal Detect Output Voltage – Low (for TTL) | $V_{OL}$-$V_{CC}$ | | 0.4 | V | 1 |
| Signal Detect Output Voltage – High (for TTL) | $V_{OH}$-$V_{CC}$ | 2.4 | | V | 1 |

## TRANSMITTER ELECTRO-OPTICAL CHARACTERISTICS

| PARAMETER | SYMBOL | MIN | TYP. | MAX | UNIT | NOTE |
|---|---|---|---|---|---|---|
| Optical Output Power | Po | -5 | | 0 | dBm | 2 |
| Extinction Ratio | ER | 10 | | | dB | |
| Center Wavelength | $\lambda_c$ | 1530 | 1550 | 1570 | nm | |
| Spectral Width (-20dB) | $\Delta\lambda$ | | | 1 | nm | |
| Side Mode Suppression Ratio | SMSR | 30 | | | dB | |
| Optical Rise time ( 10%-90% ) | $t_r$ | | | 2.0 | ns | 3 |
| Optical Fall time ( 10%-90% ) | $t_f$ | | | 2.0 | ns | 3 |
| Output Eye | | Compliant with ITU recommendation G.957 | | | | |



Coretek Opto Corp.
http://www.coretek.com.tw
1F,10 Industry E. Rd. IV., Science-Based Industrial Park, Hsinchu, Taiwan, R.O.C.
Tel:886-3-5787871 Fax:886-3-5645105

05/08/2006
Version : B

## RECEIVER ELECTRO-OPTICAL CHARACTERISTICS

| PARAMETER | SYMBOL | MIN | TYP. | MAX | UNIT | NOTE |
|---|---|---|---|---|---|---|
| Maximum Input Optical Power | $P_{max}$ | -3 | | | dBm | 4 |
| Receiver Sensitivity | $P_{min}$ | | | -34 | dBm | 4 |
| Operating Wavelength | $\lambda$ | 1100 | | 1600 | nm | |
| Signal Detect - Asserted | $P_A$ | | | -34 | dBm | 5 |
| Signal Detect - Deasserted | $P_D$ | -47 | | | dBm | 6 |
| Signal Detect - Hysteresis | $P_A$ - $P_D$ | 0.5 | | 4 | dB | |

**Notes:**

1. These outputs are compatible with 10K, 10KH, 100K ECL and PECL inputs.
2. Measured average power coupled into 9/125 $\mu$ m single mode fiber.
3. These are 10-90% values.
4. Measured with $2^{23}$-1 PRBS at BER<$10^{-10}$
5. Measured on transition – low to high
6. Measured on transition – high to low

## BLOCK DIAGRAM OF TRANSCEIVER

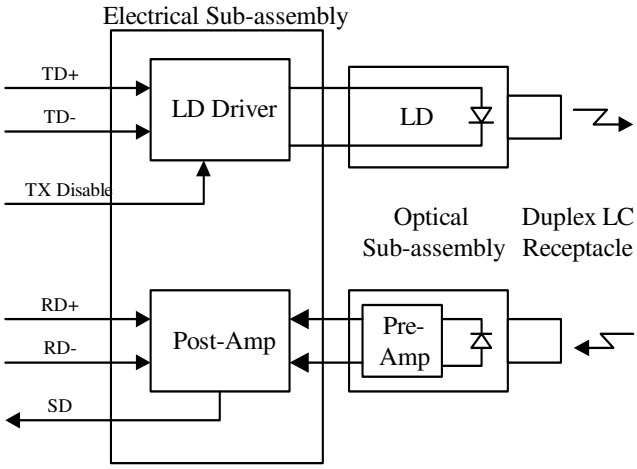


## PIN OUT DIAGRAM OF TRANSCEIVER

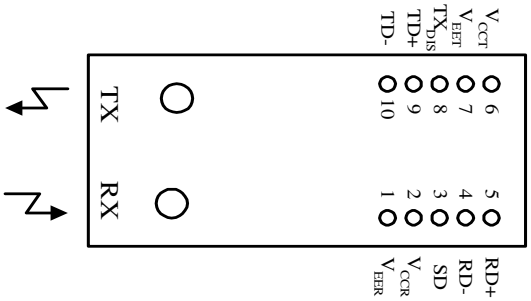


## PIN OUT TABLE

| Pin | Symbol | Functional Description |
|---|---|---|
| Mounting Posts | | The mounting posts are provided for transceiver mechanical attachment to the circuit board. They should not be connected to the circuit ground but can be connected to the chassis ground. |
| 1 | $V_{EER}$ | Receiver Signal Ground |
| 2 | $V_{CCR}$ | Receiver Power Supply |
| 3 | SD | Signal Detect is a PECL or TTL output. A high level indicates a received optical signal |
| 4 | RD- | Receiver Data Inverted Differential Output |
| 5 | RD+ | Receiver Data Non-inverted Differential Output |
| 6 | $V_{CCT}$ | Transmitter Power Supply |
| 7 | $V_{EET}$ | Transmitter Signal Ground |
| 8 | $TX_{DIS}$ | Transmitter Disable |
| 9 | TD+ | Transmitter Data Non-inverted Differential Input |
| 10 | TD- | Transmitter Data Inverted Differential Input |



Coretek Opto Corp.
http://www.coretek.com.tw
1F,10 Industry E. Rd. IV., Science-Based Industrial Park, Hsinchu, Taiwan, R.O.C.
Tel:886-3-5787871 Fax:886-3-5645105

## RECOMMENDED CIRCUIT SCHEMATIC

### 1) 3.3V SD PECL Module

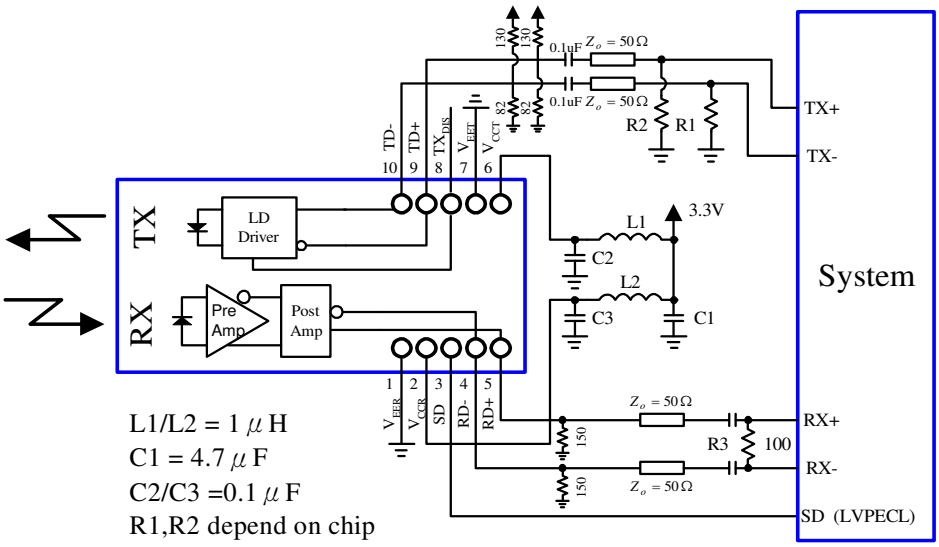


### 2) 3.3V SD TTL Module

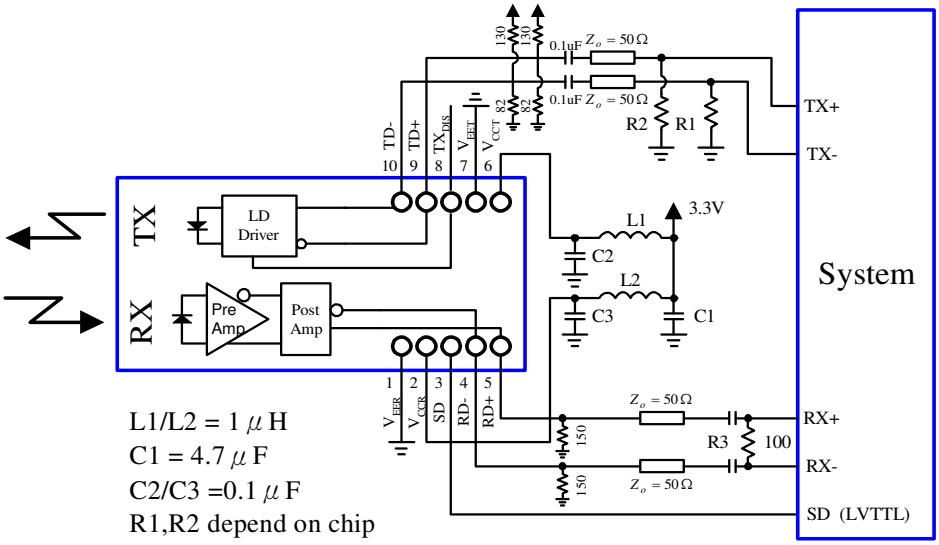




Coretek Opto Corp.
http://www.coretek.com.tw
1F,10 Industry E. Rd. IV., Science-Based Industrial Park, Hsinchu, Taiwan, R.O.C.
Tel:886-3-5787871 Fax:886-3-5645105

05/08/2006
Version : B

## MECHANICAL DIMENSIONS

**Units in mm**

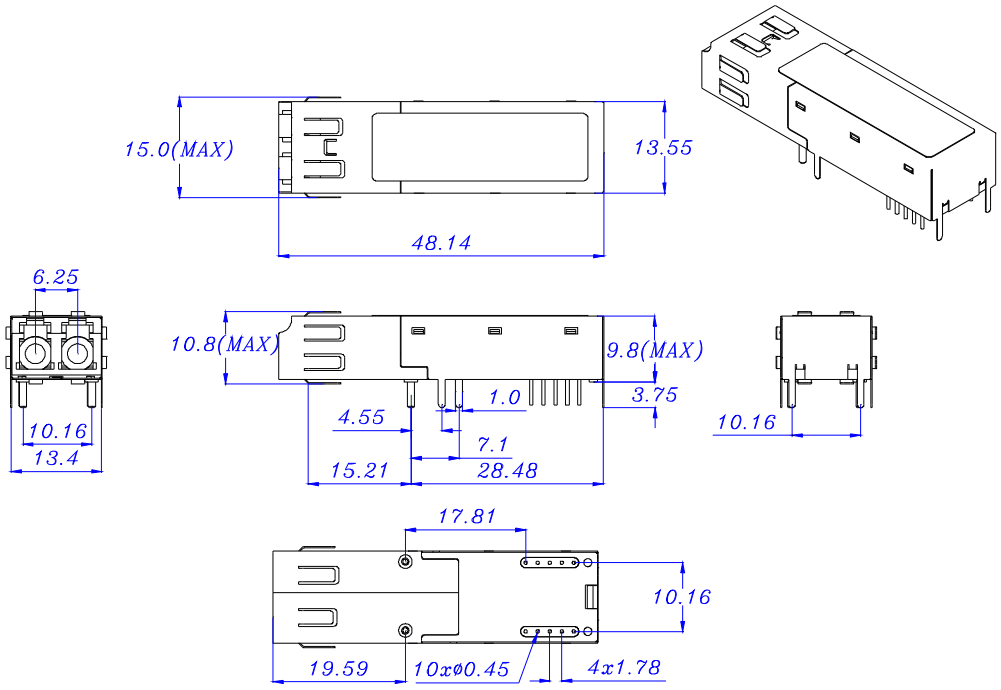


**All dimensions are ±0.2mm unless otherwise specified.**

## RECOMMENDED SFF HOST BOARD LAYOUT

**Units in mm**

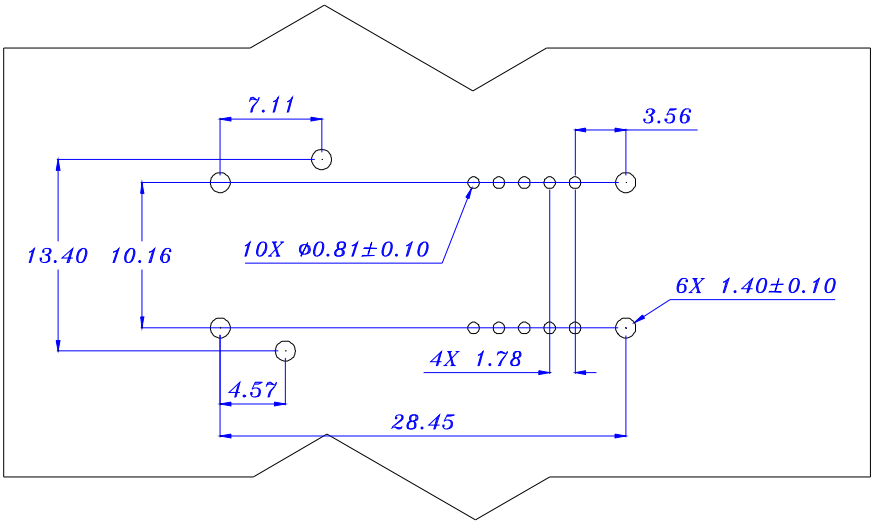


***Claim***:

*CORETEK Opto Corp. reserves the right to make changes in the specification described hereinafter without prior notice.*



*Coretek Opto Corp.*
http://www.coretek.com.tw
1F,10 Industry E. Rd. IV., Science-Based Industrial Park, Hsinchu, Taiwan, R.O.C.
Tel:886-3-5787871 Fax:886-3-5645105

05/08/2006
Version：B